IOTAFLOW
SYSTEMS PVT. LTD

Vortex / Swirl Flowmeter User Manual

" If You Want To Manage It, Measure It "

www.iotaflow.com

Vortex / Swirl Flowmeter

User Manual

1 OVERVIEW 1

1.1 TECHNICAL SUPPORT 1

1.2 MAIN SPECIFICATION 1

1.3 FEATURES 1

2 HARDWARE 2

2.1 TERMINAL BOARD WIRING 2

2.1.1 DUAL POWER SUPPLY AND EXTERNAL PRESSURE SENSOR 2

2.1.2 DUAL POWER SUPPLY, PULSE OUTPUT AND EXTERNAL PRESSURE SENSOR 3

2.1.3 RS485+DUAL POWER SUPPLY + PULSE OUTPUT+EXTERNAL PRESSURE SENSOR 4

2.1.4 RS485+DUAL POWER SUPPLY + CURRENT OUTPUT+PRESSURE SENSOR 4

2.2 SENSOR INTERFACE 5

2.2.1 VORTEX SENSOR 5

2.2.2 PRESSURE SENSOR 5

2.2.3 TEMPERATURE SENSOR 5

2.3 POWER SUPPLY AND RS485 INTERFACE 5

3 LCD DISPLAY 6

3.1 THREE-LINE DISPLAY MODE 6

3.2 TWO-LINE DISPLAY MODE 6

4 PRODUCTION PROCESS VIA LOCAL ADJUSTMENT 7

5 DATA ENTRY 8

5.1 BASIC FUNCTION OF KEYS 8

5.2 ENTER OR EXIT MENU MODE 8

5.2.1 ENTER MENU MODE 8

5.2.2 EXIT MENU MODE 8

5.3 DATA ENTRY METHOD 8

5.3.1 SELECT METHOD 8

5.3.2 DATA INPUT METHOD 8

5.4 LOCAL CONFIGURATION FUNCTION 9

5.4.1 BASIC FUNCTION (NO PASSWORD) 9

5.4.2 ADVANCED FUNCTION (PASSWORD PROTECTION) 10

5 5 TOTALIZER FLOW UNIT TABLE 14

6 PARAMETER DESCRIPTION 14
6.1 K- FACTOR 14
6.2 FIVE-POINT LINEARITY CORRECTION 14
6.3 PULSE FACTOR DESCRIPTION 15
6.4 OUTPUT ORIGINAL PULSES DESCRIPTION 15
6.5 TEMPERATURE AND PRESSURE COMPENSATION 15
6.5.1 PRECONDITION 15
6.5.2 PRESSURE SENSOR TRIM 15
6.5.3 LOW PRESSURE CUTOFF VALUE 16
6.5.4 PRESSURE BIAS SETTINGS 16
6.5.5 TEMPERATURE SENSOR TRIM 16
6.6 MEASUREMENT MODE SETUP INSTRUCTIONS 17
6.6.1 GAS QV 17
6.6.2 GAS QM 17
6.6.3 LIQUID QV 17
6.6.4 LIQUID QM 17
6.6.5 STEAM QV 17
6.6.6 STEAM MASS 18

Vortex / Swirl Flowmeter

User Manual

1 Overview

1.1 Technical Support

VFM Series is designed for vortex/swirl flowmeter with pressure and temperature compensation function. Please read this manual carefully before use Please followthismanual to completeyour operation.Ifyou have any questions, please do not hesitate to contact us. We willreplyas soon as possible.

Company: IOTAFLOW Systems Pvt Ltd
Tel: + 91 - 9910693866
Website: www.iotaflow.com

1.2 Main Specification

Power supply: 3.6VDC or12-32VDC

Operating temperature: -20 ℃ ~ +70 ℃(with LCD)
-40 ℃ ~ +85 ℃(without LCD)

1.3 Features

Configuration: Flow mode, Flow unit, Range, Density, Display, etc.

K-Factor linearity: provides2 to5 points k-Factor correction.

Local adjust functions: Setting flow range and unit, Density, Flow mode, damping, alarm,and data recoveryetc.

Two-line LCD display: Instant flow rate and totalized flow value can be displayed simultaneously with high-brightness backlight.

Perfect compensation: supports real-time temperature and pressure compensation for gas, and supports the international standard of steam density table, temperature and pressure compensation for over heat steam, pressure compensation or temperature compensation for saturated steam.

Restore factory settings: If the damping value entered is '05678', it will automatically perform 'restore factory settings'. (Manufacturers need to perform 'Data Backup' operation.)

Temperature trim: High trim and low trim easily.

Pressure trim: High trim and low trim easily.

VFM Series has a power-down data protectionfunction and a flowaccumulation function.

2 Hardware

2.1 Terminal Board Wiring

The terminalboard is used for connects the externalpower supply, output pulse, and the external pressuresensor and temperature sensor.

The following are common wiring.

2.1.1 Dual Power Supply and External Pressure Sensor

The terminalboard can be connected as below.

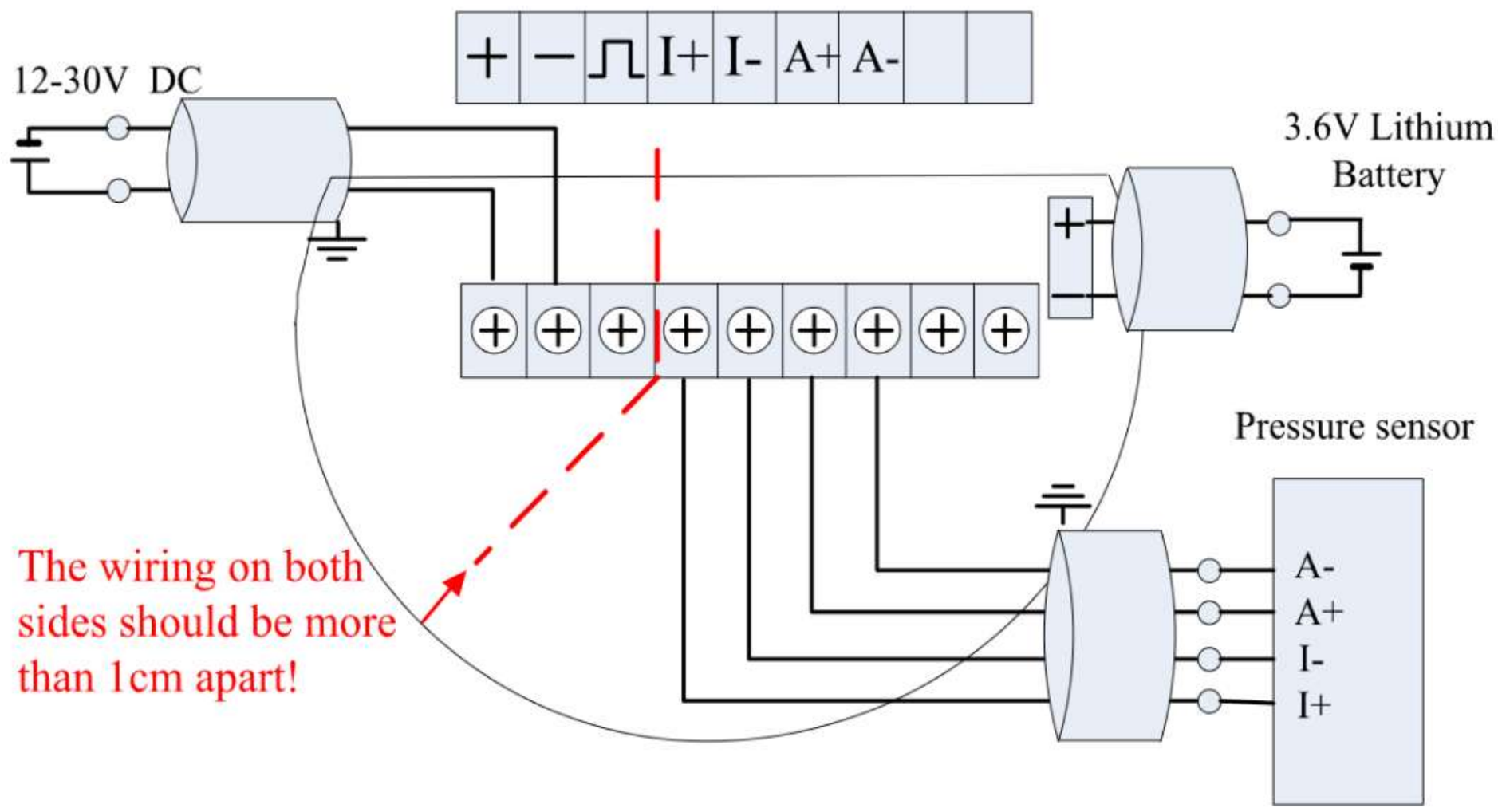

The terminalboard can be connected as below with RS485.

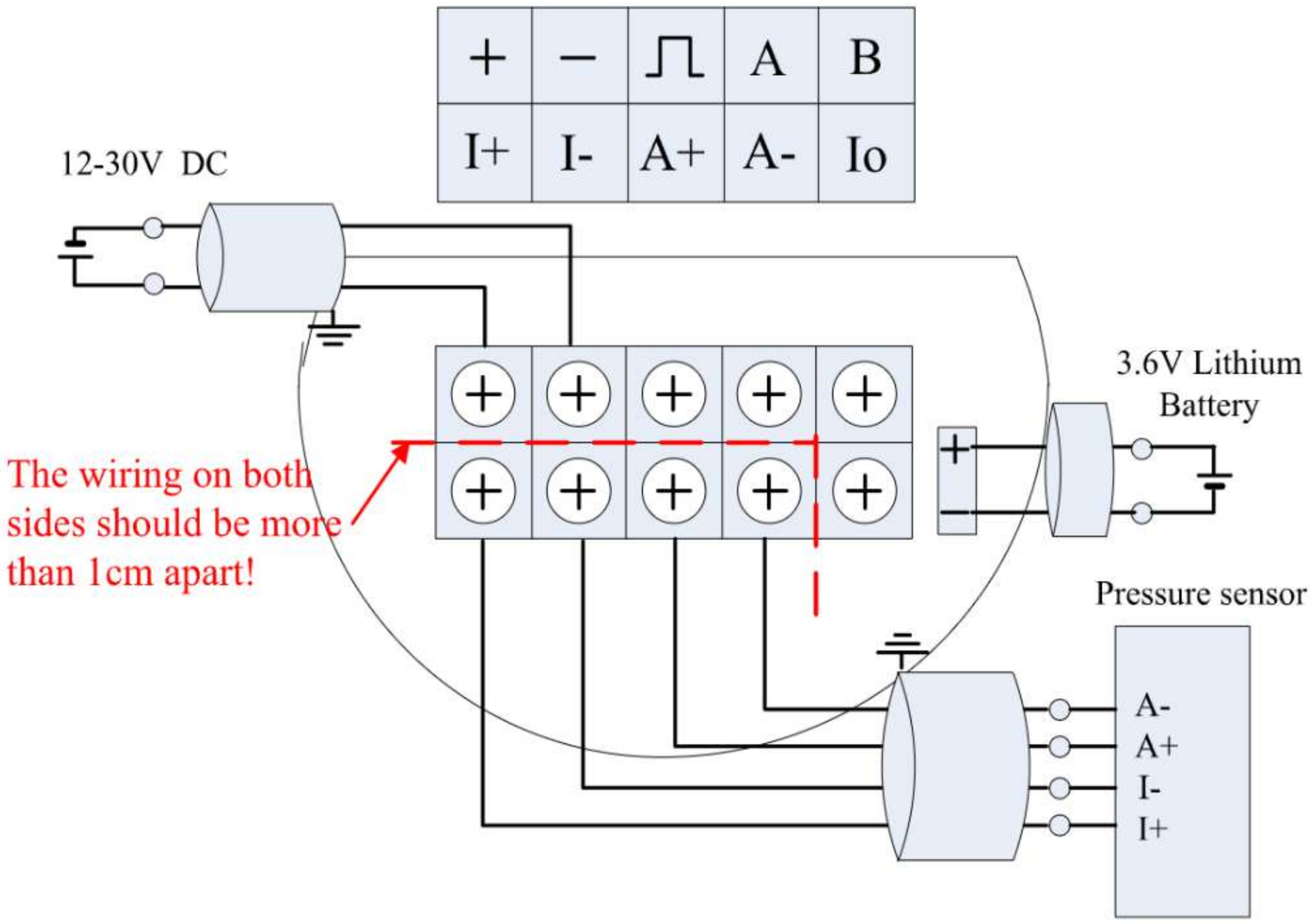

2.1.2 Dual Power Supply,Pulse Output and External Pressuresensor

The terminalboard can be connected as below.

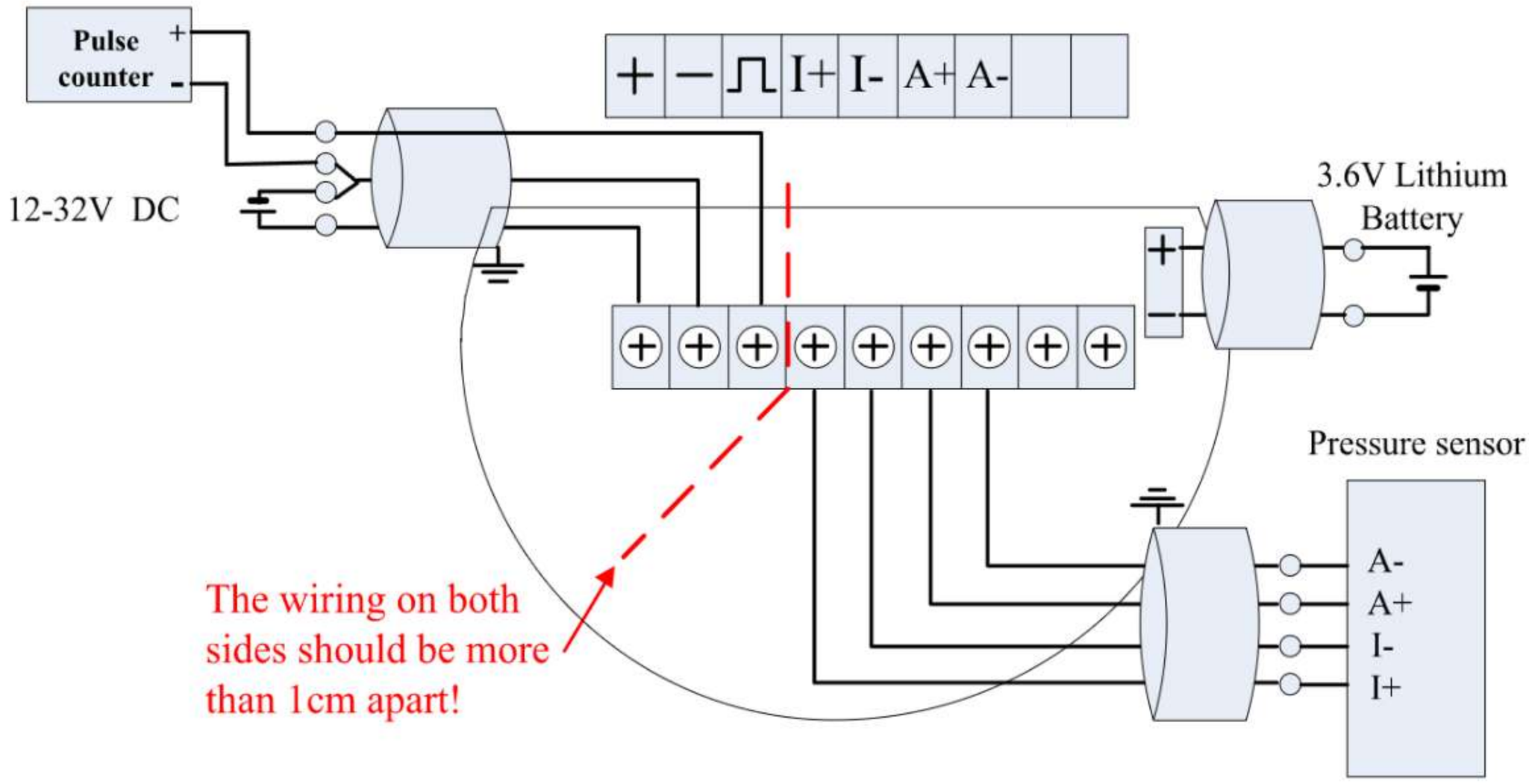

The terminalboard can be connected as below with pulse output.

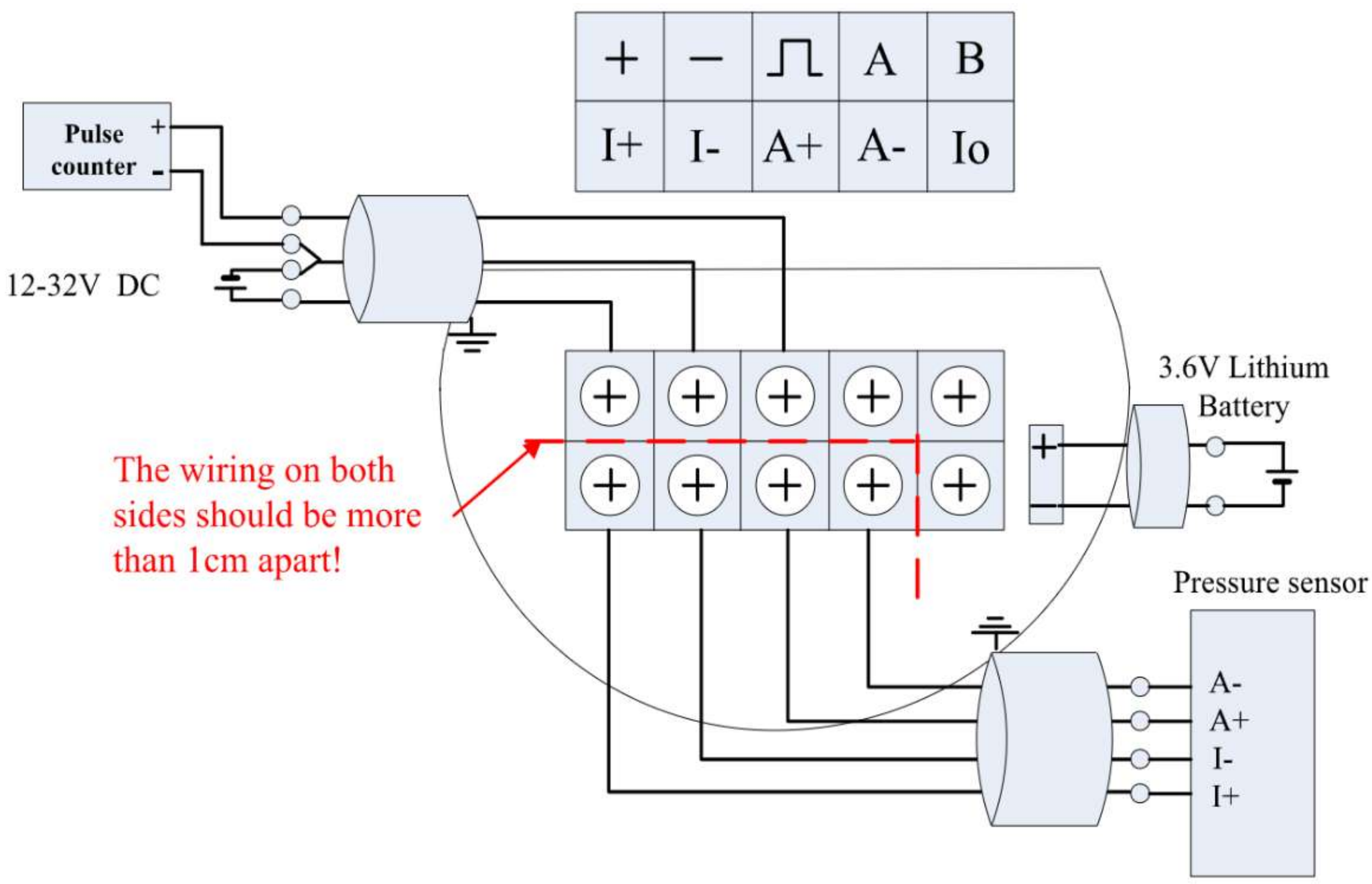

2.1.3 RS485+Dual Power Supply + Pulse Output+External Pressure Sensor

The terminalboard can be connected as below with RS485 and pulse output.

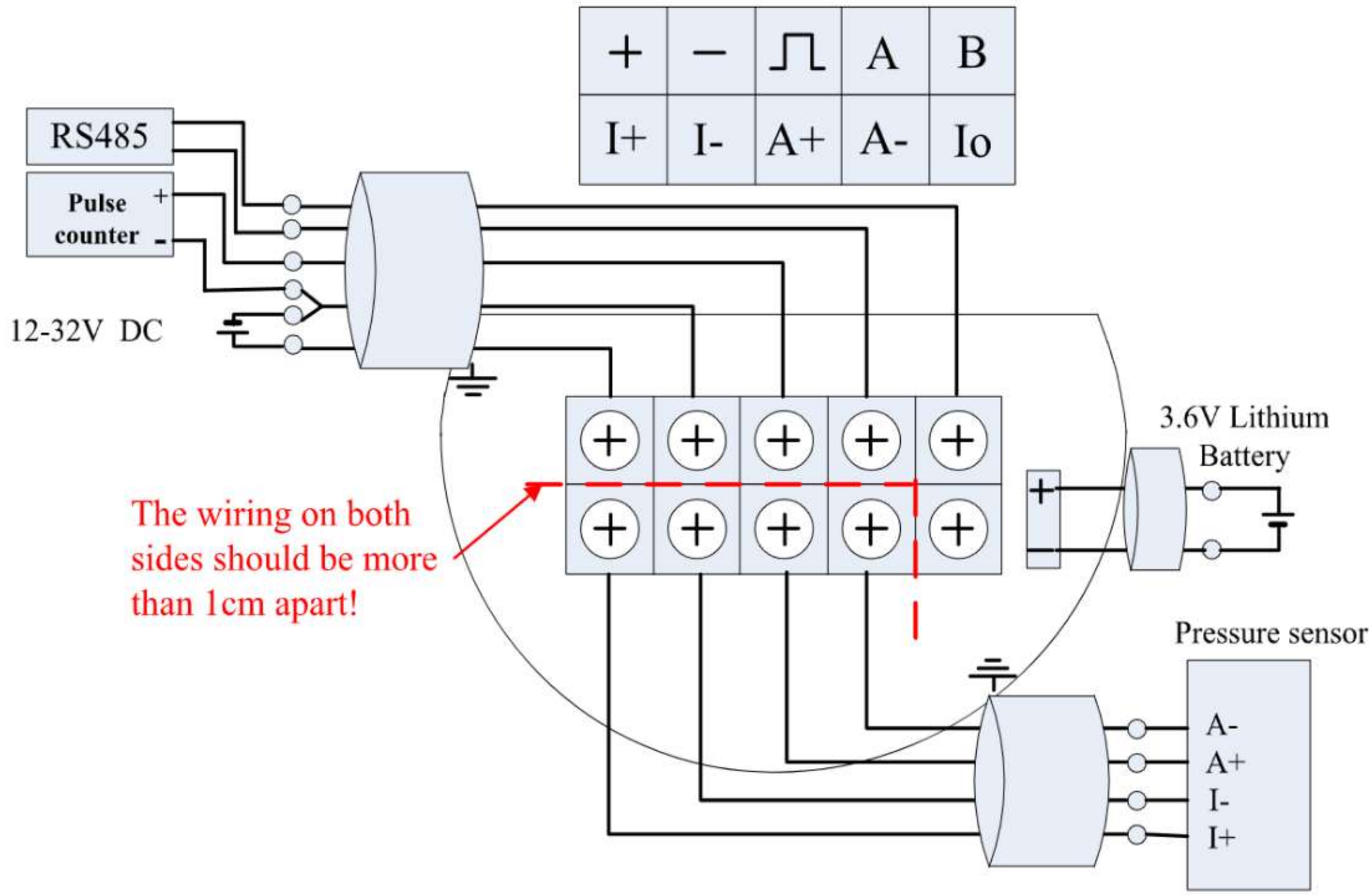

2.1.4 RS485+Dual Power Supply + Current Output+Pressure Sensor

The terminalboard can be connected as below with RS485 and current output.

Note: The standard product does not support the current output function. For current output function, please order separately!

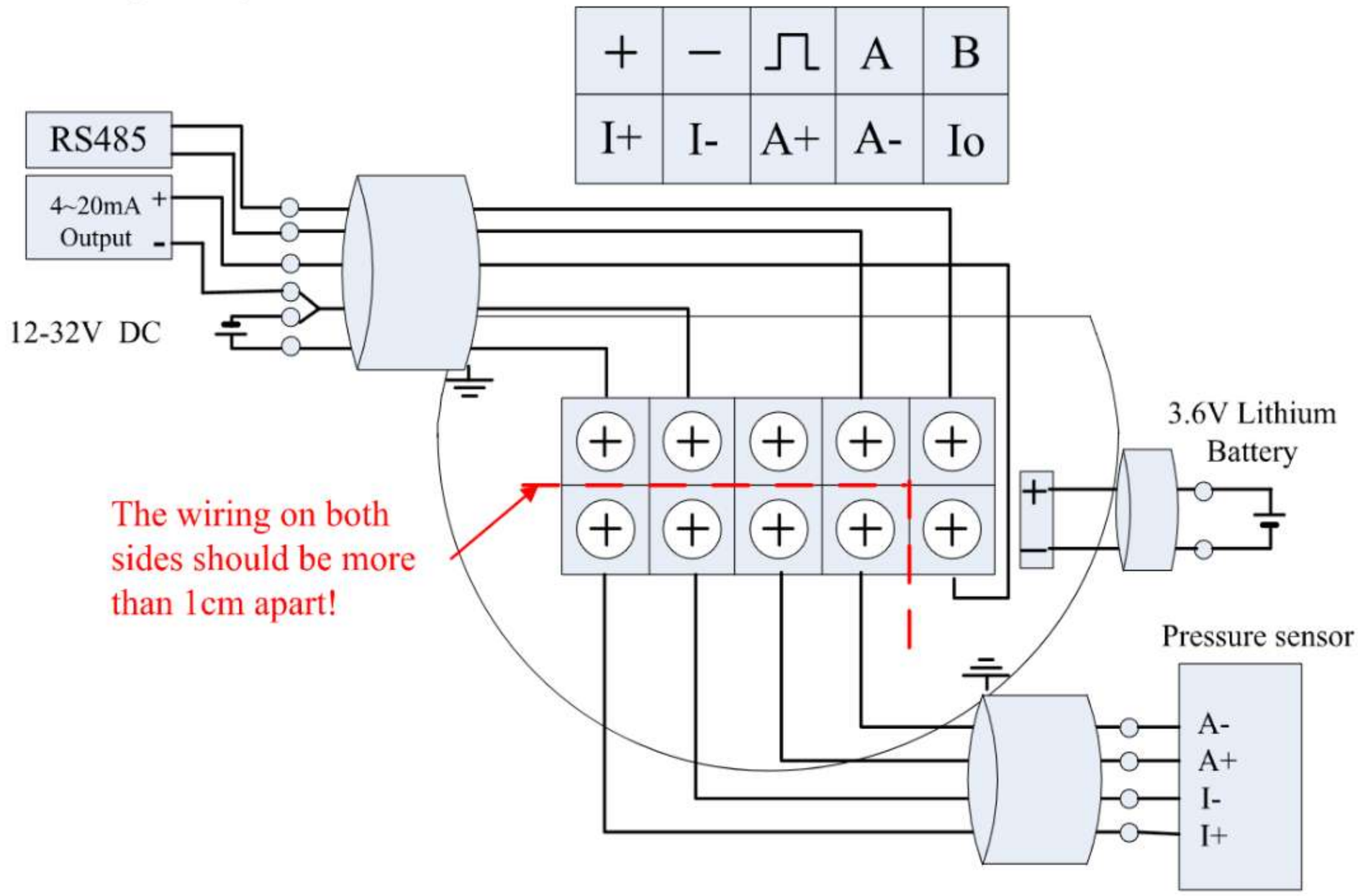

2.2 Sensor Interface

2.2.1 Vortex Sensor

The 2-Pin green terminal XT is used for connecting the vortex sensor.

2.2.2 Pressure Sensor

SockeXF2is uesedto connect pressure sensor. I+ and I- are power supply, A + and A- are the sensor signal outputs.

The pressure sensor should be bridgetype sensors. And the bridge impedance of pressure sensor should be from 3000 to 6000 ohms. The circuit supply about 0.3mA current for the pressure sensor. The pressure sensor can be used as long as its output does not exceed 50mV@0.3mA..

Socket XF2 is defined as follows.

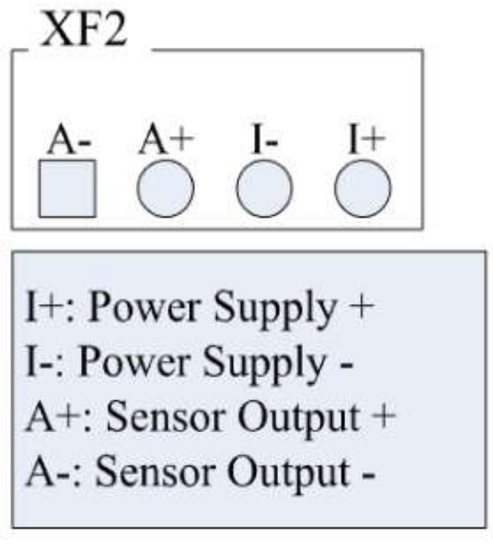

2.2.3 Temperature Sensor

Socket XF5 is used to connect PT1000.It is defined as follows.

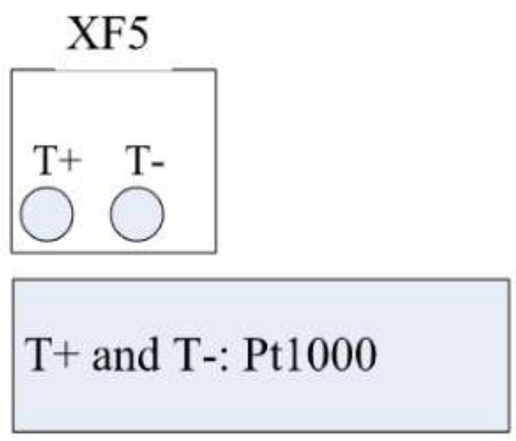

Installation Notes: The main circuit board must be reliably connected to housing (Confirm to connect to ground) !

2.3 Power supply and RS485 Interface

Socket XF3is used to connect power supply and RS485.It is defined as follows.

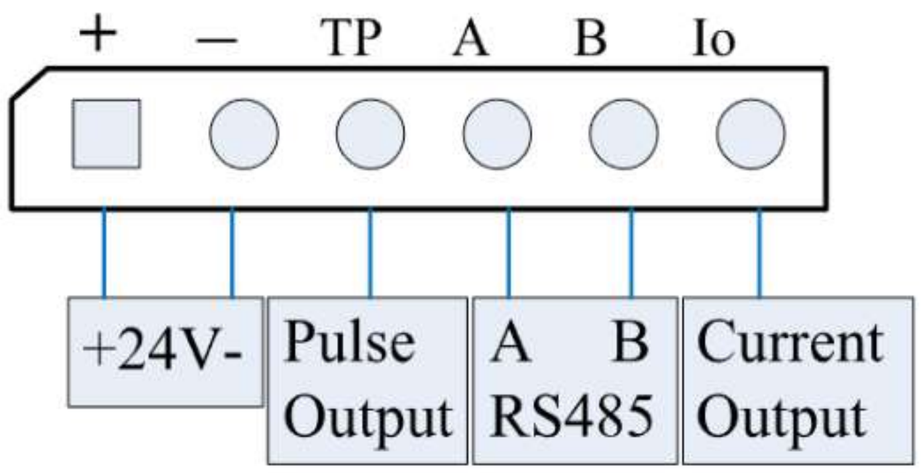

3 LCD Display

LCD with 128 * 64 dot matrix display, support for multi-variable display.

The instrument supports two display modes：

3.1 Three-line display mode

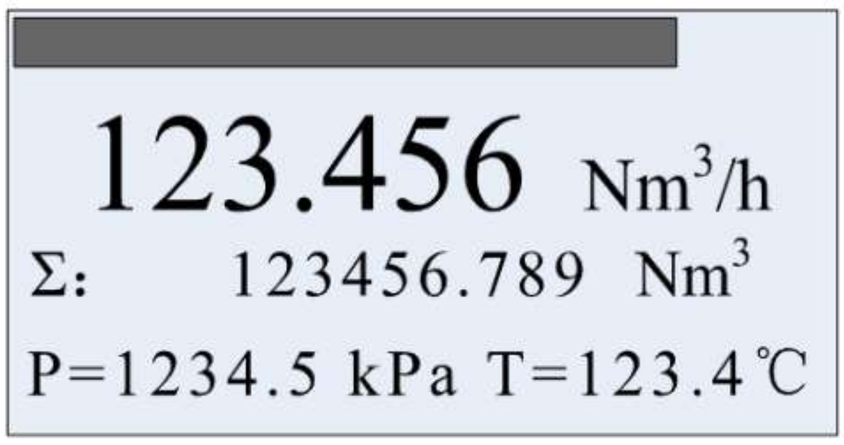

Displays the current percentage in progress bar

First line display Instantaneous flow.

The second line display totalized flow.

The third line display frequency, pressure, temperature, density, current or the percentage.

Notes:

- If enable automatic measure pressure, and the pressure signal abnormality (sensor fault), the corresponding pressure value will be replaced with the set pressure value and will flash.
- If enable automatic measure temperature, and the temperature signal abnormality (sensor fault), the corresponding temperature value will be replaced with the set temperature value and will flash.
- When the flow mode is Sat_Steam(P), that means saturated steam pressure compensation, the temperature value will display as "----", which means the acquisition of temperature sensor is not activated.
- When the flow mode is Sat_Steam(T), that means saturated steam temperature compensation, the pressure value will display as "----", which means the acquisition of pressure sensor is not activated.

You can press KEY-Mto change thethird line display variables. Use indicator to distinguish between different display variables shows in the second line.

Indicator	F:	Den:	P:	T:	Curr:	Per:	P= T=
variable	Frequency	Density	Pressure	Temperature	Loop current	Percentage	Pressure and temperature

3.2 Two-line display mode

Displays the current percentage in progress bar

First line display instant Instantaneous flow.

The second line display totalized flow.

4 Production Process via Local Adjustment

We recommend the following steps to set parameters.

Set Protection = OFF	Please make sure the current write protection is 'OFF', which allows you to change the settings.
Set The Opcode '00050'	Please input the opcode '00050' , and scroll down the menu to set meter size.
Set Meter Size	Select the meter size.
Set Fluid Type	Select the type 'Gas' or 'Liquid' .
Set Flow Limit	According to the meter size and fluid type, set the corresponding 'Low Flow Limit'and 'High Flow Limit'. The actual measurement range is about 50% of the 'Low Flow Limit' to 200% of 'High Flow Limit'.
Set Max AMP	Setting maximum gain, which corresponds to the 'Low Flow Limit' . The gain should between 200 to 600 suggested. Typically about 300.
Set K-Factor	Set average calibration k-Factor
Set Pulse Factor Unit	Select the unit for pulse output calculation.
Set Pulse Factor	Set the output pulse number corresponding to one pulse factor unit of flow. And then press Z-Key to return to main menu,
Set Alarm Limit	Set low alarm limit and high alarm limit.
Set Flow Mode	Set flow mode: Liquid Qv: Liquid volume — Liquid Qm: Liquid mass Gas Qv: Gas volume: — Gas Qm: Gas mass: Steam Qv: Steam volume — Steam(P/T): Steam mass Sat_Steam(T): Saturated steam mass (temperature compensation) Sat_Steam(P): Saturated steam mass(pressure compensation)
Set Range and Unit	Set flow unit and upper range value. The lower range value is fixed to 0. The total flow unit is depends on the flow unit.
Set Density for liquid Set Density, pressure and temperature for gas	If flow mode is liquid, then set liquid density. If flow mode is gas, then set the gas density, pressure and temperature. If flow mode is steam, you may need set the default pressure and temperature depends on the flow mode.
Set Flow Cutoff	Set low flow cutoff value.
Set Damping	Set damping.
Total Flow Reset	Totalizer reset.

Note:

This color means that these items must be done. This color means that these items must be done, and easily forgotten or incorrectly set.

5 Data Entry

5.1 Basic Function of Keys

Data is entered using the 3 keys M, S and Z on the display.

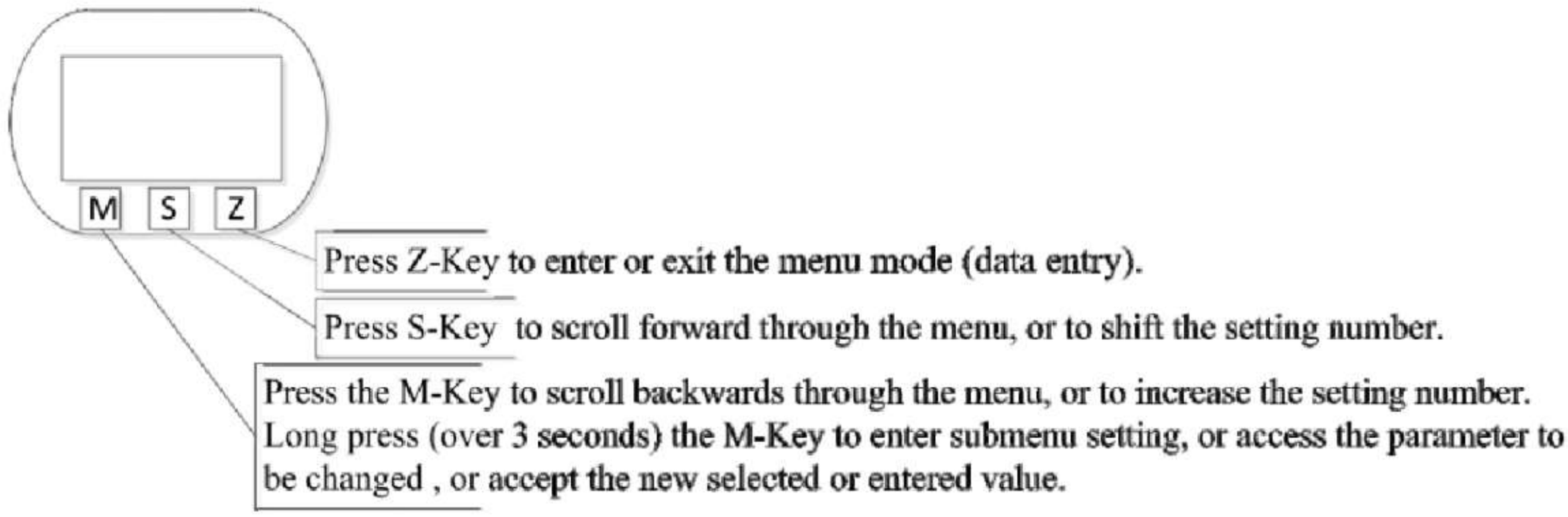

5.2 Enter or Exit Menu Mode

5.2.1 Enter Menu Mode

In the operating mode, press the "Z" key to enter the menu mode (data entry).

5.2.2 Exit Menu Mode

In the menu mode, press the "Z" key to back to the operating mode.

5.3 Data Entry Method

Setting parameters include "select" and "data input" methods.

5.3.1 Select Method

- Long press M-Key to enter setting, and the menu options will start flashing.
- Short press M-Key or S-Key to scroll backwards or forwards the menu.
- Long press M-Keyto save (access) the parameter.

5.3.2 Data Input Method

- Long press the M key, that means press the M button for 3 seconds and then release it to enter the setting. In this state, the underline is on the second line, indicating that the parameters can be modified;
- Short press the M-Key to switch the sign.
- Press the S-Key to shift the setting number. Press M-Key to increase the setting number.
- Press the S-Key to shift the setting number again. All bitscan be setaccording tothe same operation.
- Long press M-Key to save (access) the parameter. Or press Z-Key to give up and exit settings.

For example, the original range 100% is 200 and the range 100% needs to be changed to 400.

➢ Press the Z-key to enter the menu mode. ➢ Press M-Key or S-Key to scroll backwards or forwards the menu until to set the range limit menu.	Setting the upper range value menu Range 100% 200.000
➢ Long press the M key, that means press the M button for 3 seconds and then release it to enter the setting. In this state, the underline is on the second line, indicating that the parameters can be modified;	Enter setting menu Range 100% 200.000
➢ Press the M-Key to switch the sign between "+" and "-". "-"means datais negative(less than 0, vortex flowmeterupper range valuemust be apositive number).	Setting sign Range 100% +200.000
➢ Press the S-Key to shift the setting number.Then press M-Key to increase the setting number. ➢ If the highest bit is set, the number that can be entered is between 0 and 9; if it is other bits, the decimal point can also be selected.	Setting sign Range 100% +400.000
➢ Long press M-Key to save (access) the parameter. ➢ Press Z-Key to give up and exit settings.Return to the previous menu or return to the operating mode.	

5.4 Local Configuration Function

5.4.1 Basic Function (No Password)

Menu	Setting method	Notes
Contrast	Select	1~5
Protection	Select	ON / OFF
Min Alarm(%)	Data Input	Set low alarm value. Unit: %
Max Alarm(%)	Data Input	Set high alarm value. Unit: %
MeterSize	Read Only	View meter size setting.
Flow mode	Select	Liquid Qv：Liquid volume Liquid Qm：Liquid mass Gas Qv：Gas volume Gas Qm：Gas mass Steam Qv：Steam volume Steam(P/T)：Steam mass Sat_Steam(T) ：Saturated steammass (temperature compensation) Sat_Steam(P) ：Saturated steammass(pressure

		compensation)
Unit-Qv Unit-Qm	Select	Volume units supported: Nm^3/h，Nm^3/m，Nm^3/s， l/s，l/m，l/h， m^3/s，m^3/m，m^3/h，m^3/d， Scf/s，Scf/m，Scf/h， cf/s，cf/m，cf/h， USG/s，USG /m，USG /h， UKG/s，UKG /m，UKG /h， bbl/h，bbl/d， Mass units supported: g/s ，g/m，g/h， kg/s，kg/m，kg/h，kg/d， t/m，t/h，t/d， lb/h，lb/d Note: Totalizer flow's unit based on the flow unit.
Range 100%	Data Input	Set the Qmax value for selected flow mode (= 20 mA)
Density (kg/ m^3) Density (g/c m^3)	Data Input	Set Gas density (unit: Kg/m3) Set Liquid density (unit: g/cm3)
Gauge Pre.(Kpa)	Data Input	Use for gas or steam measure. Unit: kpa.
Temperature (℃)	Data Input	Use for gas or steam measure. Unit: ℃.
PV Cutoff (%)	Data Input	Range: 0% ~ 20%
Damping	Data Input	Range: 0 ~ 64S
Disp. Point	Select	Set the first line display point, can be 0,1,2, 3.
Display Mode	Select	Set display mode.
Totalizer reset	Select	When Lcd display 'Yes', long press M-Key to reset the totalizer and overflow counter.
Number of totalizer overflows	Read Only	Display of the number of totalizer overflows; 1 overflow = 10,000,000
K-Factor	Read Only	View the k-Factor.

5.4.2 Advanced Function (Password Protection)

Opcode	Data Input	**Input ****50, set 51~ 57 menu。** **Input ****60, set 60 menu。** **Input ****61, set 62 menu。** **Input ****62, set 62 menu。** **Input ****63, set 63 menu。** **Input ****70, set 70~77 menu。** **Input ****40, set 40~ 41 menu。** **Input ****38, set 38~ 39 menu。** **Input ****11, view11~ 13 menu。** **Input ****90, set 90~ 91 menu。**

		Input ****111, preset total。 **Input ****721, set temperature sensor trim data.** **Input ****741, set pressure sensor trim data.**
Signal status [51]	Read Only	LCD display： 450.00 This is the PGA gain. CH2 – A CH2 is signal channel. A means 10, it is signal amplitude, it must be greater than9.
Meter size [52]	Select	Options： 15mm，20mm，25mm，32mm，40mm，50mm，65mm，80mm，100mm，125mm，150mm，200mm，250mm，300mm，350mm，400mm，450mm，500mm，600mm; Note: 1) LCD display DN15, means meter size is 15mm. **2) If you change the meter size, you must re-set from 53 to 56.**
Fluid Type [53]	Select	Options：Gas, or Liquid. **Note: If you change the fluid type, you must re-set from 53 to 56.**
Low Flow Limit [54]	Data Input	According to the meter size and measuring media, set the corresponding low limit of the flow. The unit of 'Low Flow Limit' is fixed as **m^3/h.** The actual measurement of the lower limit of about 50% of 'Low Flow Limit'.
High Flow Limit [55]	Data Input	The 'High Flow Limit' defaults to 10 times the 'Low Flow Limit', the actual measurement of the upper limit of 2 times the set value. The unit of 'High Flow Limit' is fixed as **m^3/h.** When the actual required range ratio exceeds 20: 1, you can manually modify the'High Flow Limit'.
Max AMP. [56]	Data Input	Between200 and 600suggested. Typicallyabout 300.
k-Factor [57]	Data Input	Set average calibration k-Factor
PulseFactor Unit [58]	Select	Options：m^3, N m^3, t, kg, Scf, cf, USG, UKG, bbl, lb.
Pulse factor [59]	Data Input	Set the number of output pulses corresponding to one'PulseFactor Unit'. **Note:If you want to output the original pulse, set 'K-factor [57]' and 'Pulse factor [59]' to the same value, and 'PulseFactor Unit [58]' must set to m3.**
[60] K-Factor Trim Fi K-Factor Trim Yi	Data Input	**Five-point K-Factor correction.** **Where Fi is the reference frequency, Yiis the correction coefficient K. i=1,2,3,4,5.**
[61]	Data Input	The reference frequency value of the five-point correction

Frequency Factor		is multiplied by the Frequency Factor, and then the new reference frequency value of the correction point is obtained. Normally, this value should be 1. When calibrated with water, for gas measurements, you can set the coefficient so that the five-point correction factor remains in effect.
[62] Channel settings	Select	There are CH_1, CH_2, CH_3threeoptions。 CH_3gain maximum CH_1gain minimum Note： CH2generally used forliquid measurement, which corresponds to the configuration software, select X1 and X2. CH_3generally used forgas measurement, which corresponds to the configuration software, select X1, X2and X3.
[63] Work mode settings	Select	There are F_1, F_2, F_3, F_4four options. F_1: Anti-vibration Mode F_2: Normal Mode F_3:Turbine Mode F_4: Test Mode Note： Generally chooseF_2.
[40] Trim 4mA		Steps： 1. Long press M-Key, enter trim; 2. Short press M-key to decrease current. Press S-Key to increase current. Steppingis 16microamperes. 3. Long press M-Key to save new trim value. Or press Z-Key to exit without saving.
[41]. Trim 20mA		
[70] Temp. Measure	Select	Temperature acquisitionmode setting. Options： Manual, or Auto. Manual: Temperature uses the inputreference value. Auto:Temperature is automatic acquisition, should be use external Pt1000 or Pt100.
[71] Pressure Measure	Select	Pressure acquisitionmode setting. Options： Manual, or Auto. Manual: Pressureuses the inputreference value. Auto:Pressureis automatic acquisition, should be use external silicon pressure sensor.
[72] Temperature low trim	Data Input	Enter thelower calibrationresistor value.unit: ohm. Use standard resistance as input.

		For example: 1000 for Pt1000, or 100 for Pt100.
[73] Temperature high trim	Data Input	Enter the highcalibrationresistor value, unit: ohm. Use standard resistance as input For example:2500 for Pt1000, or250 for Pt100.
[74] Pressurelow trim	Data Input	Enter thecalibrationreferencepressure value, unit is Kpa Apply the standard pressure to the sensor. For example: 0 Kpa
[75] Pressurehigh trim	Data Input	Enter thecalibrationreferencepressure value, unit isKpa Apply the standard pressure to the sensor. For example: 1000 Kpa
[76] Pre. Cutoff	Data Input	Set the low pressurecutoff value. Unit is Kpa. If the measuredpressure valueis less than 'Pre. Cutoff', the pressure will be set to 0kpa.
[77] Set Pre. Bias	Data Input	Set the pressure bias value. Unit is Kpa. Enter the current actual pressure value to achieve bias.The pressure will be set to input value.
[38] Min Pre. (Kpa)	Data Input	This parameter is only used for steam mass measurement. In the steam massmeasurement mode, if the pressure is less than the set 'minimum pressure value' when the pressure compensation is activated, the flow will automatically return to zero.
[39] Min Temp. (℃)	Data Input	This parameter is only used for steam mass measurement. In the steam massmeasurement mode, if thetemperature is less than the set 'minimum temperature value' when the temperature compensation is activated, the flow will automatically return to zero.
[11] Version	Read Only	To view the embedded software version.
[12] Max Frequency	Read Only	The internal conversion frequency value corresponds to the 'High Flow Limit'.
[13] Min Frequency	Read Only	The internal conversion frequency value corresponds to the 'Low Flow Limit'.
[90] Modbus Addr.	Data Input	1 ~ 247
[90] Modbus Baud.	Select	"9600" ,"4800" ,"2400" ,"1200" , " 600"
[111] Total Preset	Data Input	Used to directly set the current total flow value.
[721]	Data Input	You can directly view and modify the temperature sensor

Temp. Data X0; Temp. Data Y0; Temp. Data X1; Temp. Data Y1;		calibration values. Temp. Data X0 and Temp. Data X1 are internal ADC measurements. Temp. Data Y0[73] and Temp. Data Y1[74] are the input calibration value.
[741] Pre. Data X0; Pre. Data Y0; Pre. Data X1; Pre. Data Y1;	Data Input	You can directly view and modify the pressure sensor calibration values. Pre. Data X0 and Pre. Data X1 are internal ADC measurements. Pre. Data Y0[75] and Pre. Data Y1[76] are the input calibration value.

Special Note:

Low Flow Limit, High Flow Limit, maximum gain and average calibration K- Factor should be reset， if meter size or fluid type changed. These parameters are very important for vortex flowmeter good working, please carefully set according to the actual application.

5.5 Totalizer Flow Unit Table

Totalizer flow‘s unit is determined according to the flow unit.

Flow Unit	Totalizer Flow Unit
Nm^3/h，Nm^3/m，Nm^3/s	Nm^3
m^3/d，m^3/h，m^3/m，m^3/s	m^3
l/h，l/m，l/s	L
Scf/s，Scf/m，Scf/h，	Scf
cf/s，cf/m，cf/h，	cf
USG/s，USG /m，USG /h，	USG
UKG/s，UKG /m，UKG /h，	UKG
bbl/h，bbl/d，	bbl
g/h，g/m，g/s	g
kg/d，kg/h，kg/m，kg/s	kg
t/d，t/h，t/m	t
lb/h，lb/d	lb

6 Parameter Description

6.1 K- Factor

The average k-Factor value shown in the display must be the same as the value on the primary tag on the flowmeter primary.

6.2 Five-point Linearity Correction

The actual k-Factor of vortex flowmeter is different in low flowrates and high flowrates. In order to improvethe accuracy ofvortex flowmeter, it provides2 to5 points k-Factor correction.

For example, forD = 80mm, measuring mediumis liquid, the realk-Factor indifferentflowratesas follows:

<20 Hz	40	80	> 100
2200	2100	2100	2000

Then wecan choose4-pointscalibrated, set k-Factor 2100.Enter thecalibration dataas follows:

Frequency	k-Factor coefficient	formula
20	0.954545	2100/2200=0.954545
40	1	2100/2100=1
80	1	2100/2100=1
100	1.05	2100/2000=1.05

6.3 Pulse FactorDescription

There are two ways to set the pulse factor via HART-CONFIG Tool.

1. Set the number of pulses output every one unit [58] total flow.
2. Set a pulse corresponds to how many of one unit [58] total flow.

The output pulses are based on the flow value after five-point K-Factor correction. That will get higher accuracy than using the original pulses.

The local adjustment menu [59] is used to set the output pulse number corresponding to 1 unit [58] total flow.

6.4 Output Original PulsesDescription

If you need the flowmeter outputs original pulses, follow the following steps:

1. Set the K- Factor and the Pulse Factor equal. That is the value of local adjustment menu 57 and 59 equal. And set the pulse factor unit to m^3.
2. Cancel the Five-point linearity correction via HART-CONFIG Tool. Or enter the local adjustment menu 60 to set all of correction coefficient K equal 1.0.

Then the flowmeter output pulse frequency equals to the original pulse frequency.

6.5 Temperature and Pressure Compensation

6.5.1 Precondition

The pressure sensor should be bridgetype sensors and the temperature sensor should be Pt1000

User input reference pressure should be gauge pressure, and the unit must be kpa. Absolute pressure and gauge pressure relationship: Absolute pressure = gauge pressure + 101.325kPa.

User should input the reference resistor when trim the temperature sensor.

6.5.2 Pressure Sensor Trim

If you want trim the pressure sensor, please check the flow mode and pressure acquisitionmode setting.

Menu	**Setting**
Flow mode	Set one of the following：(Other modes do not use pressure sensor.) Gas Qv：Gas volume Gas Qm：Gas mass Steam Qv：Steam volume Steam(P/T)：Steam mass Sat_Steam(P)：Saturated steammass(pressure compensation)
[71]	Pressure acquisitionmode setting

Pressure Measure	Auto:Start automatic measurement of external pressure. External pressure sensor required

You can trim the sensor via local adjustment menu 'Pressurelow trim'[74] and 'Pressurehigh trim'[75]:

1. Set flow mode and pressure acquisition mode.
2. Apply zero pressure to the sensor, enter into menu 'Pressurelow trim'[74], input the reference pressure (gauge pressure, unit kpa) to trim zero.
3. Apply full pressure to the sensor, enter into menu 'Pressurehigh trim'[75], input the reference pressure (gauge pressure, unit kpa) to trim full.

Note: 'Pressure low trim' and 'Pressure full trim' should be calibrated together to ensure that the measured pressure is correct.

It should be noted that the pressure measurement cycle is approximately 4 seconds. The calibration should be performed after the input pressure has stabilized for more than 10 seconds.

6.5.3 Low pressure cutoff value

If the pressure measurement is close to 0Kpa, but it is not stable, for example, varied between -0.01 and 0.01kPa. You can set 'Low pressure cutoff value'to adjust the pressure measurement to 0Kpa.

If the measured pressure value is less than 'Low pressure cutoff value', it will set to be 0kpa.

6.5.4 Pressure bias settings

If there is a fixedpressure deviation, for example, the actual pressure value is 10 Kpa and the measured pressure value is 9.8 Kpa. You can perform 'Set Pre. Bias [77]', and enter 10(Kpa) to remove this error.

Enter the current actual pressure value, to achieve bias.

6.5.5 Temperature Sensor Trim

If you want trim the temperature sensor, please check the flow mode and temperature acquisitionmode setting.

Menu	**Setting**
Flow mode	Set one of the following: (Other modes do not use temperature sensor.) Gas Qv：Gas volume Gas Qm：Gas mass Steam Qv：Steam volume Steam(P/T)：Steam mass Sat_Steam(T)：Saturated steammass(Temperature compensation)
[70] Temperature Measure	Temperature acquisitionmode setting Auto:Start automatic measurement of external temperature. External temperature sensor Pt1000 or Pt100 required

It provides two points calibration for the temperature sensor. We recommend use 1000ohm and 2500ohm, or 100ohm and 2500ohm (for PT100) resistors for trim.

You can trim the sensor via local adjustment menu 'Temperature low trim'[72] and 'Temperature high trim'[73]:

1. Set flow mode and temperature acquisition mode.
2. Apply lower resistor, such as 1000ohm, enter into menu 'Temperature low trim'[72], input the reference resistor value(1000) to trim..

3. Apply higher resistor, such as 2500ohm, enter into menu 'Temperature high trim'[73], input the reference resistor value(2500) to trim.

6.6 Measurement Mode Setup Instructions

6.6.1 Gas Qv

A: Measure Working State Volume

Density: Set to the density at 20 ℃ (not used for computing)
Gauge Pre.(Kpa): **0.0KPa 'Change does not affect the measurement'**
Gas Tem (℃): **20℃ 'Change does not affect the measurement'**

B: Measure Standard State Volume(20 ℃)

Density: Set to the density at 20 ℃ (not used for computing)
Gauge Pre.(Kpa): Input working state pressure (Gauge pressure). If the temperature and pressure compensation circuit board is used and set to Pressure automatic acquisition, use real-time pressure
Tem (℃): Input working state temperature. If the temperature and pressure compensation circuit board is used and set to Temperature automatic acquisition, use real-time temperature

6.6.2 Gas Qm

A: Current Actual Density is Known (the state transition factor is 1)

Density: Set to the current actual density.
Gauge Pre.(Kpa): 0.0KPa (Not allowed to change) 'changes affect the measurement'
Temperature (℃): 20℃ (Not allowed to change) 'changes affect the measurement'

B: Standard State Density is Known (state transition calculation is required)

Density: Set to the standard state density. (0 KPa gauge pressure, 20 °C)
Gauge Pre.(Kpa): Input working state pressure. If the temperature and pressure compensation circuit board is used and set to Pressure automatic acquisition, use real-time pressure.
Temperature (℃): Input working state temperature. If the temperature and pressure compensation circuit board is used and set to Temperature automatic acquisition, use real-time temperature.

6.6.3 Liquid Qv

Density: Set to 1.0 or the current actual density. (Not used for computing)

6.6.4 Liquid Qm

Density: Set to the current actual density.

6.6.5 Steam Qv

Density: Set to 1.205 or the current actual density. (Not used for computing)

Gauge Pre.(Kpa): 0.0KPa 'Not used for computing'
Temperature (℃): 20℃ 'Not used for computing'

6.6.6 Steam Mass

A: Steam(P/T): (Temperature and Pressure Compensation)

If the external temperature sensor or pressure sensor fails, calculate the steam density according to the input temperature or pressure

Density: Not used for computing

Gauge Pre.(Kpa): Input working state pressure. If the temperature and pressure compensation circuit board is used and set to Pressure automatic acquisition, use real-time pressure,

Temperature (℃): Input working state temperature. If the temperature and pressure compensation circuit board is used and set to Temperature automatic acquisition, use real-time temperature

B: Sat_Steam(T): Saturated Vapor(Temperature Compensation)

If the external temperature sensor fails or the temperature sensor is not connected, the steam density is calculated according to the input temperature.

Density: Not used for computing.

Gauge Pre.(Kpa): Not used for computing.

Temperature (℃): Input working state temperature. If the temperature and pressure compensation circuit board is used and set to Temperature automatic acquisition, use real-time temperature

C: Sat_Steam(P): Saturated Vapor(Pressure Compensation)

If the external pressure sensor fails or the pressure sensor is not connected, the steam density is calculated according to the input pressure.

Density: Not used for computing.

Gauge Pre.(Kpa): Input working state pressure. If the temperature and pressure compensation circuit board is used and set to Pressure automatic acquisition, use real-time pressure.

Temperature (℃): Not used for computing.

IOTAFLOW
SYSTEMS PVT. LTD

Vortex / Swirl Flowmeter User Manual

Contact Us:-

IOTAFLOW SYSTEMS PVT. LTD.

A-2/13, Mayapuri Industrial Area
Phase-II, New Delhi - 110064
Call: +91 9910693866
+91 7982674054
Email: contact@iotaflow.com

Specifications subject to change without prior notice. © Iotaflow Systems Pvt. Ltd.

" If You Want To Manage It, Measure It "

www.iotaflow.com